BIL WPD Water Meter

Product Specifications

A highly accurate Woltman Parallel Turbine Water Meter pattern approved and tested in Australia for use in non-urban applications.



The BIL WPD Water Meter is a Woltman parallel turbine meter used for accurately measuring a wide range of flow rates with a mainly constant flow rate profile.

The housing and internals are hydrodynamically optimised for highly accurate and stable measurement. Combining the use of high-quality composite plastics with a specially enhanced impeller bearing ensures consistent performance over the operational life of the water meter.

The pattern approved BIL WPD Water Meter is designed and tested over a wide measuring range and provides accurate measuring results over a long period making it suitable for all non-urban applications where NMI-M10 Pattern Approved meters are required between 50mm and 300mm diameter.

To access the NMI Certificate of Approval go to:
https://www.industry.gov.au/sites/default/files/nmi/certificates-approval/14-3-54_r1_0.pdf

Key characteristics

- Wide measuring range, small pressure loss
- Low starting flow and high overload security
- Pulse output with integrated reed switch
- Long-term accuracy and stability
- Swirl-reducing inlet design
- Replaceable measuring internals
- Water-proof (IP68), hermetically sealed, glass/copper register
- Solid cast iron construction with durable epoxy coating for exposure to field applications

Applications

- For the measuring of high flow rates
- For horizontal or vertical installation
- For cold water up to 50°C
- For applications where NMI-M10 Pattern Approved water meters are required

Available sizes

- 50mm – 300mm (2” – 12”)
- Table E flanged inlet/outlet

TECHNICAL SPECIFICATIONS

Available Sizes		Max. Working Pressure		Max. Liquid Temperature	Body	Connections
INCH	MM	BAR	PSI			
2” - 12”	50 - 300	16	232	50°C	Epoxy coated cast iron	Flanged (Table E)

PERFORMANCE DATA

Horizontal installation performance data

Meter Size	DN50	DN50	DN80	DN100	DN150	DN200	DN250	DN300
Minimum flow rate - Q1 (m^3/h)	0.2	0.2	0.32	**0.32**	0.79	2.5	3.94	6.25
Transitional flow rate - Q2 (m^3/h)	0.32	0.32	0.5	**0.5**	1.27	4	6.3	10
Maximum continuous flow rate - Q3 (m^3/h)	25	40	63	**100**	250	400	630	1000
Overload flow rate - Q4 (m^3/h)	31.25	50	78.75	**125**	312.5	500	787.5	1250
Attainable measuring range - Q3/Q1	125	200	200	**315**	315	160	160	160
Pressure class - Δp (kPa)	10	25	10	**16**	16	10	10	10

Vertical installation performance data

Meter Size	DN50	DN50	DN80	DN100	DN150	DN200	DN250	DN300
Minimum flow rate - Q1 (m^3/h)	0.5	0.5	0.79	**0.5**	1.25	3.2	5.04	8
Transitional flow rate - Q2 (m^3/h)	0.8	0.8	1.26	**0.8**	2	5.12	8.06	12.8
Maximum continuous flow rate - Q3 (m^3/h)	25	40	63	**100**	250	400	630	1000
Overload flow rate - Q4 (m^3/h)	31.25	50	78.75	**125**	312.5	500	787.5	1250
Attainable measuring range - Q3/Q1	50	80	80	**200**	200	125	125	125
Pressure class - Δp (kPa)	10	25	10	**16**	16	10	10	10

Highlighted column: DN100 – order code WPD100PH (100mm flanged meter with 100 litre per pulse reed switch).

Minimum flow rate (Q1) is the lowest flow at which the meter accuracy will be within the maximum permitted error.

Transitional flow rate (Q2) is the flow rate at which the maximum permitted error of the meter changes from ±5% to ±2%.

Maximum continuous flow rate (Q3) is the highest flow rate at which the meter accuracy will be within the maximum permitted error.

Overload flow rate (Q4) is the highest flow rate at which the meter is required to operate for a short period of time within the maximum permitted error whilst maintaining metrological performance.

Pressure loss class (Δp) is the maximum head loss, at a flow rate between Q1 and Q3, caused by the presence of the meter in the pipeline.

Typical Error Curve

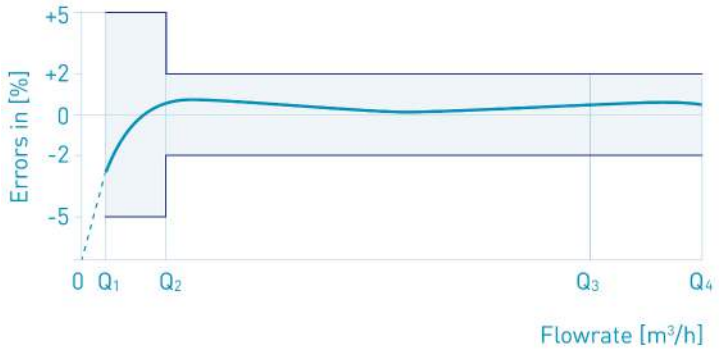

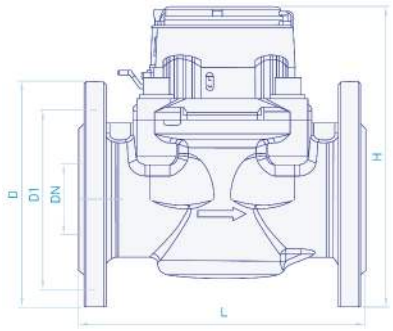

DIMENSIONS								
Meter Size		**DN50**	**DN80**	**DN100**	**DN150**	**DN200**	**DN250**	**DN300**
Flange Diameter (mm)	D	165	200	**220**	285	340	405	460
Bolt Diameter (pc x mm)		4 x 16	4 x 16	**8 x 16**	8 x 19	8 x 19	8 x 19	12 x 22
Bolt Circle Diameter (mm)	D1	114	150	**178**	235	292	356	406
Overall Length (mm)	L	200	200	**250**	300	350	450	500
Total Height (mm)	H	216	242	**252**	312	365	450	460
Weight Approx (kg)		11	16	**18**	33	49	68	105

Installation

For monitored irrigation installation requirements, refer to your relevant Government authority for standards, certifications and approvals.

For other general applications:

- The water meter may be installed in either a horizontal or vertical position. For vertical positions the flow should always be upwards.
- The meter must be installed to ensure the pipe and water meter are full of water whilst operating.
- Prior to installation, the pipeline should be thoroughly flushed to remove any debris or contaminants.
- Straight pipe sections before and after the meter are:
  - For DN50 water meters: 5x diameter of straight pipe before the meter and 2x diameter of straight pipe after the meter;
  - For DN80 to DN300 water meters: 10x diameter of straight pipe before the meter and 5x diameter of straight pipe after the meter; and
  - Where diameter refers to the nominal diameter of the water meter.

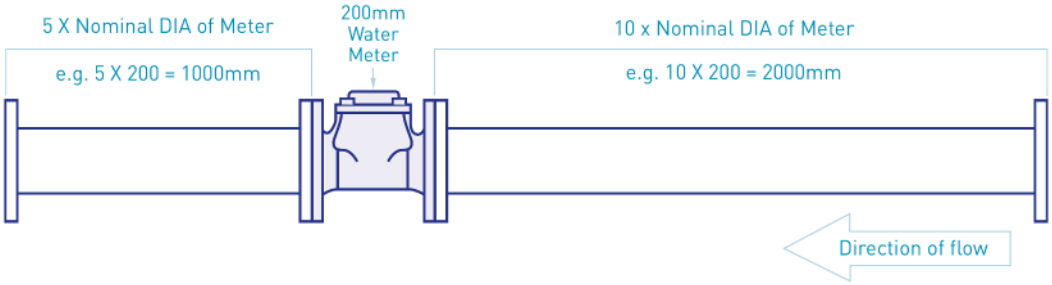

Example of DN200 water meter installation

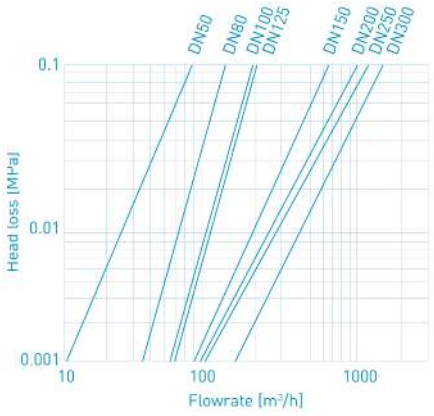

Head Loss Curve



Dial for DN150 – DN300 size meters



BIL WPD Water Meter

Ordering information

WPD100PH: 100mm flanged meter with 100 litre per pulse reed switch (DN100).

PRODUCT DESCRIPTION	ORDER CODE
50mm flanged meter with 100 litre per pulse reed switch	WPD50PH
80mm flanged meter with 100 litre per pulse reed switch	WPD80PH
100mm flanged meter with 100 litre per pulse reed switch THIS DATASHEET	WPD100PH
150mm flanged meter with 1000 litre per pulse reed switch	WPD150PH
200mm flanged meter with 1000 litre per pulse reed switch	WPD200PH
250mm flanged meter with 1000 litre per pulse reed switch	WPD250PH
300mm flanged meter with 1000 litre per pulse reed switch	WPD300PH

ACCESSORIES	ORDER CODE
Reed switch only	WPDREED
Internal assembly only (xxx = meter size in mm)	WPDxxxPHINT
50mm PVC Table D/E Flange with 50mm BSP female	SPF50BSPF

Flotech Solutions Pty Ltd
ABN 60 093 474 483
Unit 3, 72 Argyle Street, South Windsor NSW 2756

Phone: **(02) 4572 0974**
Email: sales@flotech.com.au
Web: www.flotech.com.au